Math Facts Kit

HIIP, HIIP, HOORAY FOR ADDITION

2+ Adding with 2

Math Facts Kit

These pages will help you memorize your

TWO-ADDITION FACTS

When you think you know the facts all by heart, go to your teacher and do the Final Test on the last page.

If you get ALL right in 90 seconds, you will have

BEAT the 2+ level

You'll get a certificate!

+ = + = + = +

1. Flash the Math.

FLASH CARDS

Cut out these cards along the **solid lines.**
Fold along the **dotted lines** to make two-sided flash cards.

Color and decorate your flash cards. Take your time, make them really fancy. Think about the numbers as you color. That will help you memorize the facts.

9	2+4=	9	2+7=	12	2+10=
5	2+3=	8	2+6=	11	2+9=
4	2+2=	7	2+5=	10	2+8=

a. Play the Math.

How fast can you say your math facts?
Time yourself with the ...

Helitimer

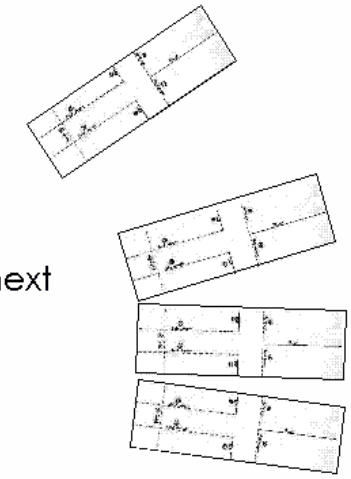

Cut along the solid lines and fold along the dotted lines as directed to make the Helitimers on each of the next two pages.

Hold the Helitimer as high as you can and drop it.
It should twirl **down to the ground.**

Give the correct answer to the math fact on the Helitimer <u>before</u> the Helitimer hits the ground.

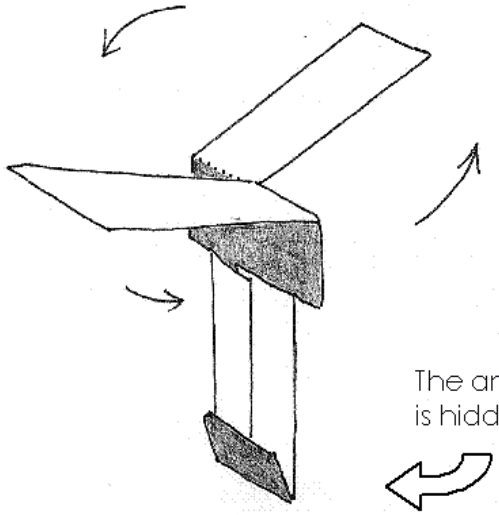

The Helitimer

The answer to the math fact is hidden under these folds.

Color/decorate your Helitimer

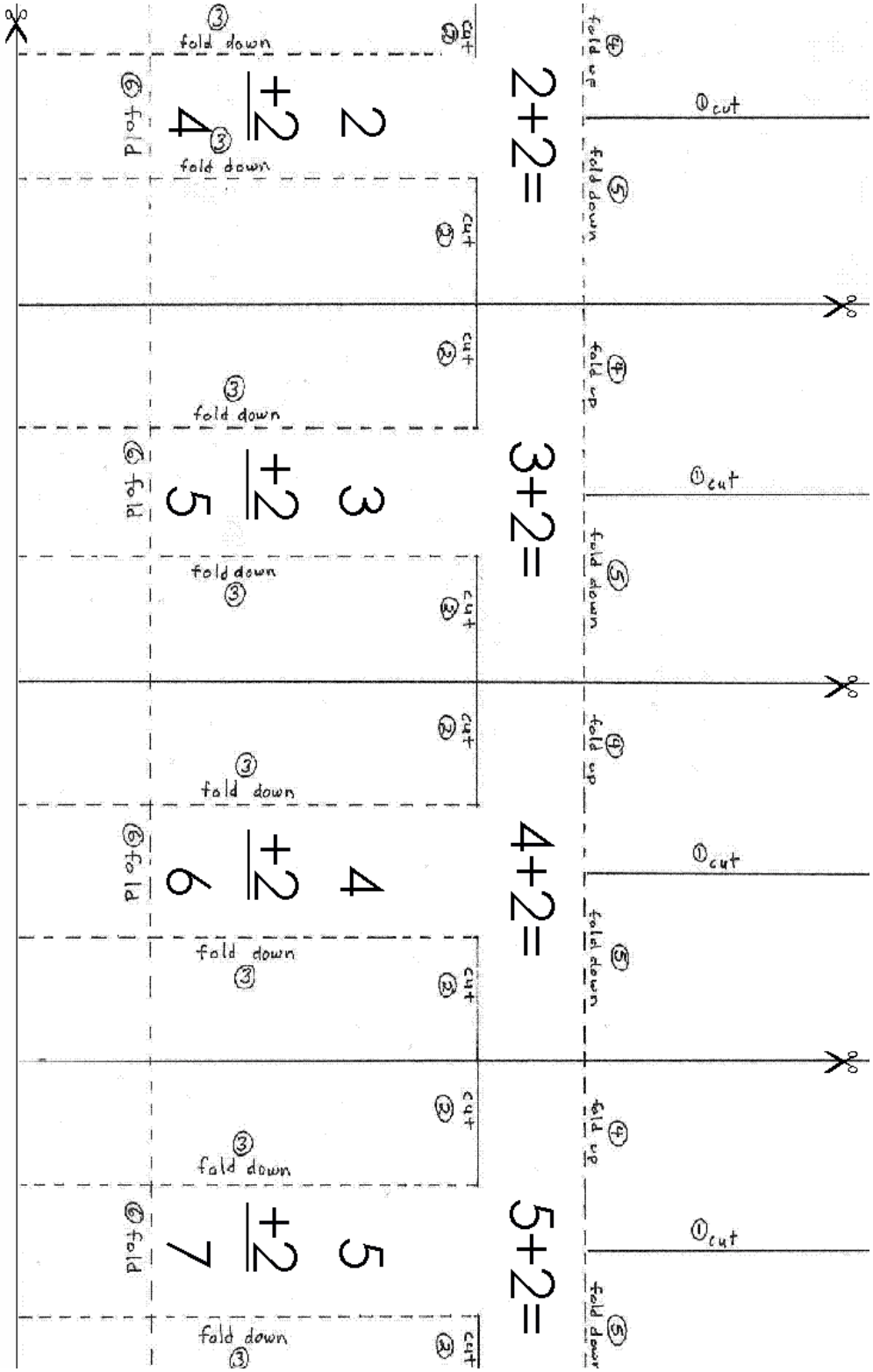

a. Play the Math. Continued ...

...More Helitimers

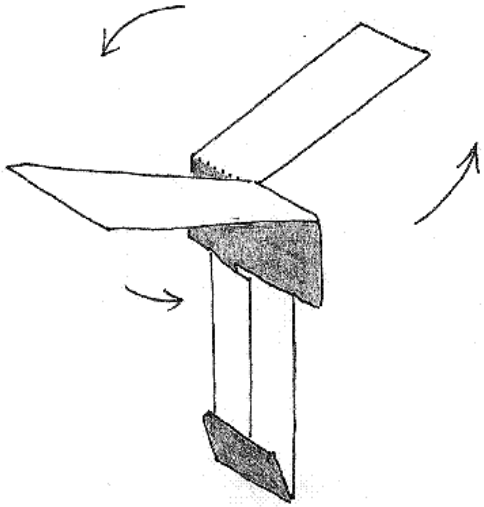

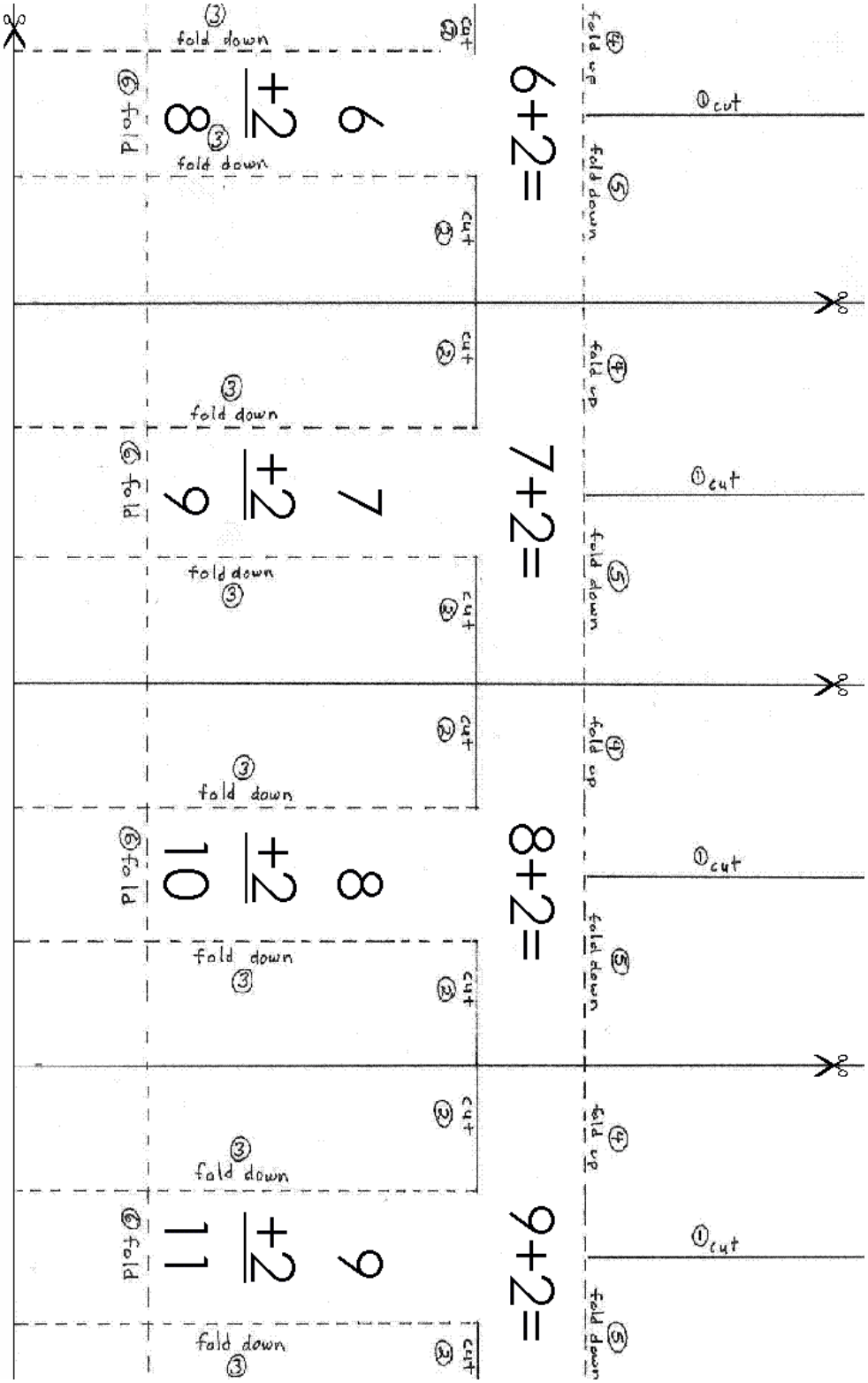

X-Ray Vision

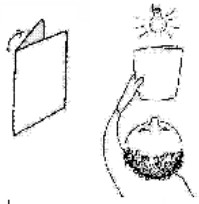

Fold this sheet neatly and evenly in half, with the printed side on the outside. Solve as many of the problems as you can in **90 seconds.** When you are done, hold the folded paper - problem side facing you - up to the light. You will see the correct answers through the paper. **Check your answers!** If you have trouble seeing through the paper, press the two halves of the paper closer together.

11	3	10	5	10	6	11
4	6	8	11	9	6	10
11	11	9	5	10	9	11
9	6	8	6	12	5	3
11	10	9	6	7	7	8

FOLD ALONG LINE

3. Work the Math.

1st 90 Seconds of Math

The next three pages have timed drills. Do these problems with a stop-watch. How many can you get right in 90 seconds? Try to beat your own score on each page.

HOLD UP TO THE LIGHT TO CHECK ANSWERS

9 + 2	2 + 1	2 + 8	2 + 3	8 + 2	4 + 2	9 + 2
2 + 2	2 + 4	2 + 6	9 + 2	7 + 2	4 + 2	2 + 8
2 + 9	9 + 2	7 + 2	2 + 3	2 + 8	7 + 2	9 + 2
7 + 2	4 + 2	2 + 6	2 + 4	10 + 2	3 + 2	1 + 2
2 + 9	8 + 2	2 + 7	2 + 4	2 + 5	5 + 2	2 + 6

3. Work the Math. 2nd sheet

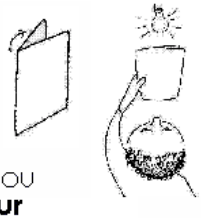

Fold this sheet neatly and evenly in half, with the printed side on the outside. Solve as many of the problems as you can in **90 seconds.** When you are done, hold the folded paper - problem side facing you - up to the light. You will see the correct answers through the paper. **Check your answers!** If you have trouble seeing through the paper, press the two halves of the paper closer together.

4	6	8	8	5	7	9
9	3	7	5	6	9	11
4	6	7	6	9	6	10
11	3	10	5	6	9	11
10	7	8	7	9	10	5
11	10	12	6	7	8	8

FOLD ALONG LINE

3. Work the Math.

2nd 90 Seconds of Math

Hold up to light to check answers

2 + 2	2 + 4	2 + 6	6 + 2	3 + 2	2 + 5	2 + 7
7 + 2	2 + 1	4 + 2	2 + 3	5 + 2	2 + 7	9 + 2
2 + 2	2 + 4	5 + 2	4 + 2	7 + 2	2 + 4	2 + 8
9 + 2	2 + 1	2 + 8	2 + 3	4 + 2	2 + 7	9 + 2
8 + 2	2 + 5	2 + 6	5 + 2	2 + 7	2 + 8	2 + 3
9 + 2	8 + 2	10 + 2	2 + 4	2 + 5	6 + 2	2 + 6

3. Work the Math. 3rd sheet

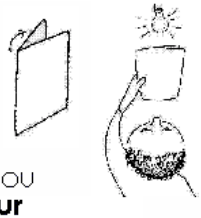

Fold this sheet neatly and evenly in half, with the printed side on the outside. Solve as many of the problems as you can in **90 seconds.** When you are done, hold the folded paper - problem side facing you - up to the light. You will see the correct answers through the paper. **Check your answers!** If you have trouble seeing through the paper, press the two halves of the paper closer together.

4	6	12	10	11	7	9
11	3	10	5	7	9	11
4	6	8	11	10	12	10
11	3	6	5	7	9	11
4	7	8	6	9	10	11
11	5	9	6	7	12	8

FOLD ALONG LINE

3. Work the Math.

3rd 90 Seconds of Math

Hold up to light to check answers

2 + 2	4 + 2	10 + 2	2 + 8	9 + 2	2 + 5	7 + 2
2 + 9	2 + 1	2 + 8	3 + 2	2 + 5	7 + 2	2 + 9
2 + 2	2 + 4	2 + 6	9 + 2	8 + 2	10 + 2	2 + 8
2 + 9	2 + 1	4 + 2	2 + 3	2 + 5	2 + 7	9 + 2
2 + 2	2 + 5	6 + 2	2 + 4	2 + 7	8 + 2	9 + 2
2 + 9	3 + 2	2 + 7	4 + 2	2 + 5	10 + 2	2 + 6

3. Work the Math. Mastery Test

TO **BEAT** THE 2+ LEVEL,
take this final test with an adult. Have the adult correct the test and sign at the bottom if you get ALL problems right **in 90 secs**.

2 + 2	7 + 2	2 + 6	2 + 8	3 + 2	2 + 5	6 + 2
9 + 2	2 + 1	2 + 8	2 + 3	8 + 2	4 + 2	9 + 2
2 + 2	2 + 4	2 + 6	9 + 2	7 + 2	4 + 2	2 + 8
2 + 9	9 + 2	7 + 2	2 + 3	2 + 8	7 + 2	9 + 2
7 + 2	4 + 2	2 + 6	2 + 4	10 + 2	3 + 2	1 + 2
2 + 9	8 + 2	2 + 7	2 + 4	2 + 5	5 + 2	2 + 6

100% of these problems were answered correctly. Signed_____

Congratulations

_____ name of student

has **Beaten the** 2+ Level. This student has mastery over adding single digit numbers to 2.

signed_____